K1A - 17P WITH START - STOP CONTROL

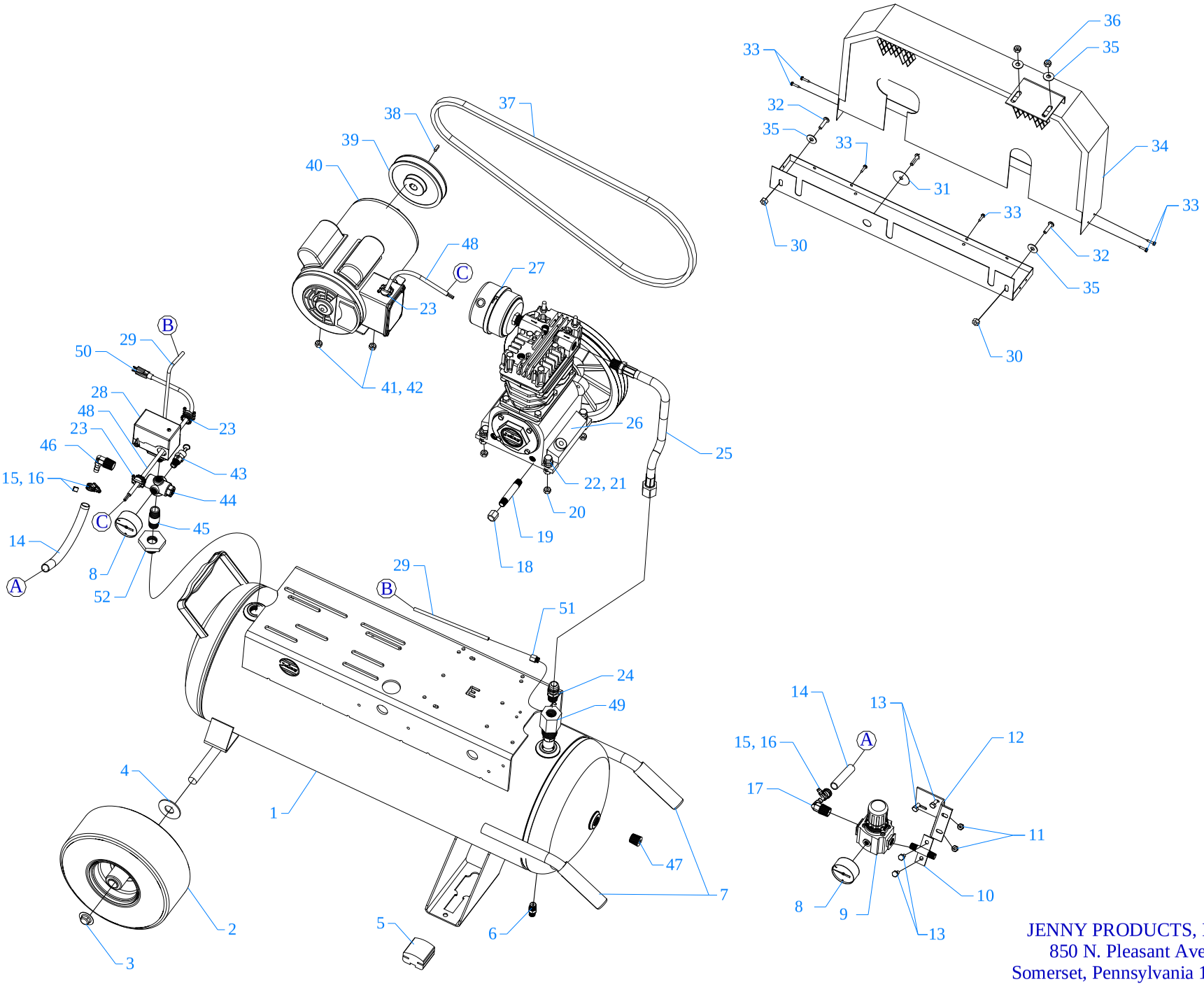

Copyright 2006

JENNY PRODUCTS, INC.
850 N. Pleasant Ave.
Somerset, Pennsylvania 15501

Jenny Products, Inc.
850 North Pleasant Avenue
Somerset, PA 15501-1069
Ph: 814-445-3400
Fx: 814-445-2280

Parts List for Model K1A-17P Start Stop Control

NOTE: The quantity number indicates the total number of pieces required for a complete unit repair.
When ordering parts give compressor model, serial number and part number. Order assemblies when possible.

REF. NO.	PART NO.	DESCRIPTION	QTY.
1	411-1029	TANK,PORTBL,17G,UM,F&KE/KG,H17UM-1P	1
2	JP2643-F	WHEEL,PNEUMATIC,10"ODX3/4"ID,BALLBRNG	2
3	120-1257	NUT,PAL,ST,PL,3/4"	2
4	120-1222	WASHER,FLAT,STEEL,PLATED,USS,3/4	2
5	104-1249	PAD,RUBBER,40D,11GA,1-1/4X1-7/8X2-1/2,WP	2
6	141-1058	DRAIN,PETCOCK,BRASS,1/4"NPTM,DC14	1
7	104-1072	GRIP,HANDLE,RUBBER,YELLOW,7/8",STERILE	2
8	142-1000	GAUGE,PSI,200#,BK MT,JENNY,2",1/4NPT,PG2	2
9	160-1001	REGULATOR,PRESSURE,AIR,3/8"NPT	1
9A	360-1109	REGULATOR,PRESSURE,AIR,W/PG14,3/8"N,R38 INCLUDES 8,9,1/4 PLUG	1
10	150-1083	BRACKET,REGULATOR,STEEL,PLATED,3/8",BR	1
10A	320-1029	BRACKET,REGULATOR,W/HARDWARE,ASSY,BR INCLUDES 10,11,13	1
11	120-1116	NUT,LOCK,FLANGE,HEX,SERR,ST,PLTD,1/4-20	2
12	109-1153	BRACKET,REGULATOR,17P	1
13	120-1243	SCREW,FLANGE,HEX,SERR,ST,PL,1/4-20X 1/2	4
14	104-1022	HOSE,AIR,200 PSI,3/8"IDX30"LONG	1
15	120-1173	CLAMP,HOSE,GEAR,WORM,SS,5/16" TO 7/8"	2
16	104-1075	CAP,COVER,PLASTIC,RED,0.40 X 1/4"X 3/8"	2
17	121-1145	BARB,HOSE,ELBOW,MALE,BRASS,3/8HSX3/8NPTM	1
18	122-1083	CAP,HEX,STEEL,1/4"NPT	1
19	122-1032	NIPPLE,STEEL,SCH 40,1/4" X 3" L	1
20	120-1116	NUT,LOCK,FLANGE,HEX,SERR,ST,PLTD,1/4-20	4

Copyright 2006 Jenny Products, Inc.

Jenny Products, Inc.
850 North Pleasant Avenue
Somerset, PA 15501-1069
Ph: 814-445-3400
Fx: 814-445-2280

Parts List for Model K1A-17P Start Stop Control

NOTE: The quantity number indicates the total number of pieces required for a complete unit repair.
When ordering parts give compressor model, serial number and part number. Order assemblies when possible.

REF. NO.	PART NO.	DESCRIPTION	QTY.
21	120-1009	SCREW,CAP,HEXHD,GR5,ST,PLTD,1/4-20X1-1/4	4
22	120-1070	WASHER,FLAT,STEEL,PLATED,SAE,1/4"	4
23	123-1029	CONNECTOR,ROMEX,CLAMP,STRAIGHT,3/8"	3
24	121-1008	CONNECTOR,MALE,BRASS,5/8-45SAEX1/2"NPTM	1
25	360-1392	AFTERCOOLER,HOSE,SS,TEFLON,5/8"ODX19"L	1
26	421-1102	PUMP,CMPRSR,PISTON,REPLCMT,BLUE,KU	1
27	320-1121	FILTER,W/DECALS,ASSY,G154S	1
28	140-1074-01	SWITCH,PSI,2HP,100-125#,UNLDR&LVR,PBVL	1
29	610-1090	TUBE,CONTROL,COPPER,W/SLEEVE,1/4"X39"LG	1
30	120-1116	NUT,LOCK,FLANGE,HEX,SERR,ST,PLTD,1/4-20	2
31	120-1072	WASHER,FENDER,ST,PLATED,1/4"X1-1/2"OD	1
32	120-1267	SCREW,PAN HD,PHIL,STEEL,PLTD,1/4-20 X 1"	3
33	120-1177	SCREW,SELF DRILL,HEX,ST,PL,1/4 X 1	6
34	320-1177	BELTGUARD,F&K,W/PAN,3.4WX13.0HX23LG	1
35	120-1075	WASHER,FLAT,STEEL,PLATED,5/16"	4
36	120-1119	NUT,LOCK,FLANGE,HEX,SERR,ST,PLTD,5/16-18	2
37	154-4L450	BELT,VEE,A43,4L-450	1
38	120-1108	KEY,STEEL,BLACK,3/16X3/16X 1-1/2" LENGTH	1
39	154-1206	PULLEY,CI,SG,3.2PDA,5/8ID,AK34X5/8	1
40	130-1010	MOTOR,1HP,115-230/60/1,1725RPM,ODP	1
41	120-1018	SCREW,FLANGE,HEX,SERR,ST,PLD,5/16-18X3/4	4
42	120-1119	NUT,LOCK,FLANGE,HEX,SERR,ST,PLTD,5/16-18	4
43	141-1014	VALVE,SAFETY,ASME,1/4",165 PSI	1

Copyright 2006 Jenny Products, Inc.

Jenny Products, Inc.
850 North Pleasant Avenue
Somerset, PA 15501-1069
Ph: 814-445-3400
Fx: 814-445-2280

Parts List for Model K1A-17P Start Stop Control

NOTE: The quantity number indicates the total number of pieces required for a complete unit repair.
When ordering parts give compressor model, serial number and part number. Order assemblies when possible.

REF. NO.	PART NO.	DESCRIPTION	QTY.
44	220-1121	BLOCK,MANIFOLD,ZINC,5 HOLE,TAPPED,MC-5	1
45	122-1146	NIPPLE,STEEL,SCH 80,PLTD,1/2" X 2-1/2" L	1
46	121-1143	BARB,HOSE,ELBOW,MALE,BRASS,3/8HSX1/2NPTM	1
47	122-1047	PLUG,SOCKET,HEX,ST,PL,1/2" NPT	1
48	123-1113	WIRE,SO,ASSY,12/3,34"LONG,W/TERMINALS	1
49	141-1036	VALVE,CHECK,INSERT,3/4"M X1/2"F,W/1/8 PT	1
50	123-1023-01	CORD,DROP,SJOW,5-15PLUG,15A,12/3,6 FT	1
51	121-1025	CONNECTOR,MALE,COMPRESSION,BR,1/4TBX1/8"	1
52	122-1206	BUSHING,REDUCER,HEX,ST,PL,3/4" X 1/2"NPT	1
NOT SHOWN	610-1225	KIT,ELEMENT,FILTER,G54E,PKG OF 4,G54EP	1
NOT SHOWN	105-1209	OIL,PUMP,SYNTHETIC,BLUE,1 QUART,ESQ	1

Copyright 2006 Jenny Products, Inc.

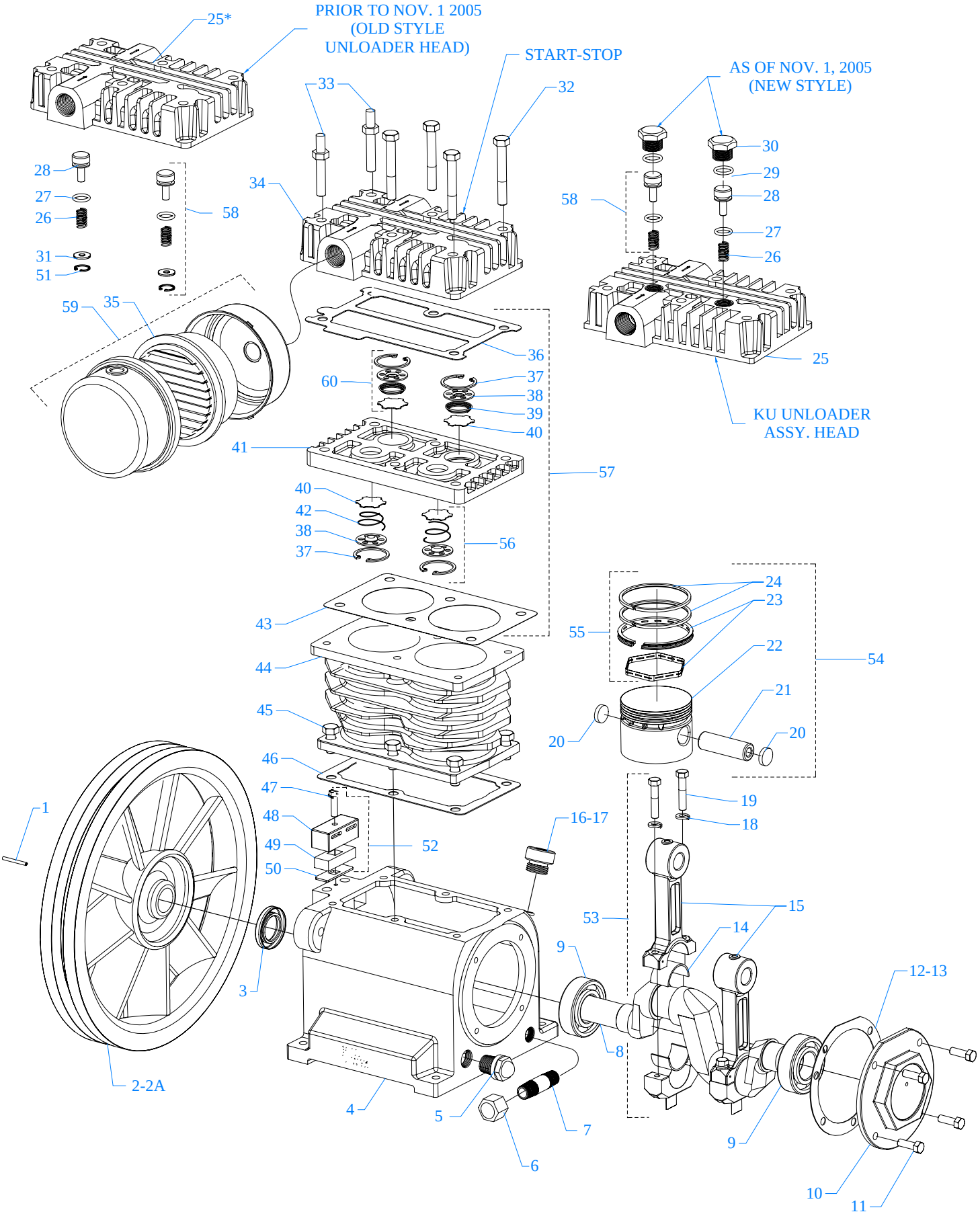

MODEL K & KU
Two Cylinder Single Stage
2-1/2" Bore X 2" Stroke

JENNY PRODUCTS, INC.
850 N. Pleasant Ave.
Somerset, Pennsylvania 15501

Copyright 2007

Jenny Products, Inc.
850 North Pleasant Avenue
Somerset, PA 15501-1069
Ph: 814-445-3400
Fx: 814-445-2280

Parts List for Model K & KU Pump Assembly

NOTE: The quantity number indicates the total number of pieces required for a complete unit repair.
When ordering parts give compressor model, serial number and part number. Order assemblies when possible.

REF. NO.	PART NO.	DESCRIPTION	QTY.
1	120-1163	PIN,ROLLED,COILED,STL,BLK,1/4ODX1L,K25	1
2	220-1093	FLYWHEEL,K PUMP,CI,10-3/8,1 GROOVE,K23A	1
2A	220-1090	FLYWHEEL,GT PUMP,CI,13-1/4,2 GROOVE,G23 (KC Pump)	1
3	150-1036	SEAL,OIL,LIP,SINGLE,0.875 DIA,K11E	1
4	220-1009	CRANKCASE,K PUMP,CI,W/SIGHT GLASS,K1	1
5	160-1076	GAUGE,SIGHT,LEVEL,OIL,3/8"NPT,LO-M49	1
6	122-1083	CAP,HEX,MI,1/4"NPT	1
7	122-1032	NIPPLE,STEEL,SCH 40,1/4" X 3" L	1
8	220-1010	CRANKSHAFT,K PUMP,CI,MACHINED,K20A	1
9	150-1000	BEARING,BALL,K9	2
10	220-1001	CAP,BEARING,K PUMP,CI,MACHINED,K2	1
11	120-1004	SCREW,CAP,HEXHD,GR5,ST,BLK,1/4-20X3/4 (10FT-LB)	4
12	104-1000-01	GASKET,CAP,BEARING,F&K&G PUMP,1/32THK,L3	1
13	104-1000-02	GASKET,CAP,BEARING,F&K&G PUMP,1/64THK,L4	1
14	150-1011	BEARING,ROD,CONNECTING,PUMP,F,K,G	4
15	310-1001-02	ROD,CONNECTING,WO/BRNG INSERT,L21L&L21K	2
16	610-1029	PLUG,CRANKCASE,FILL,OIL,W/O-RING,K14	1
17	104-1016	RING,O,BUNA-N,5/8"IDX13/16"ODX3/32"THK	1
18	120-1068	WASHER,LOCK,SPLIT,ST,BLK,HIGH CLLR,1/4"	4
19	120-1010	SCREW,CAP,HEXHD,GR5,ST,BLK,1/4-20X1-1/4 10 FT-LB	4
20	104-1103	BUMPER,WRIST PIN,PLASTIC,K36A	4
21	150-1005	PIN,PISTON,STEEL,HARDENED,K35	2
22	220-1005	PISTON,PUMP,ALUMINUM,MACHINED,K32	2

Copyright 2007 Jenny Products, Inc.

Jenny Products, Inc.
850 North Pleasant Avenue
Somerset, PA 15501-1069
Ph: 814-445-3400
Fx: 814-445-2280

Parts List for Model K & KU Pump Assembly

NOTE: The quantity number indicates the total number of pieces required for a complete unit repair.
When ordering parts give compressor model, serial number and part number. Order assemblies when possible.

REF. NO.	PART NO.	DESCRIPTION	QTY.
23	610-1065	KIT,RING,OIL,W/EXPANDER,ASSY,K34	2
24	150-1003	RING,COMPRESSION,PISTON,STEEL,EBA 22,K33	4
25	220-1016	HEAD,UNLOADING,G PUMP,CI,6HOLES,LU80	1
26	150-1020	SPRING,VALVE,UNLOADER,INTAKE, KU83	2
27	104-1020	RING,O,SILICON,7/16"IDX5/8"ODX3/32"THK	2
28	150-1028	PISTON,UNLOADER,VALVE,BRASS,KU81	2
29	104-1015	RING,O,BUNA-N,1/2"IDX11/16"ODX3/32"THK	2
30	122-1051	PLUG,HEX ,BRASS,11/16-16 UN-2B X .550	2
31	150-1042	WASHER,BRASS,1/32X 0.605ODX1/4 ID,KU84	2
32	120-1028	SCREW,CAP,HEXHD,GR5,ST,BLK,5/16-18X2-1/4 (22 FT-LB)	4
33	120-1252	BOLT,STUD,HEX,ST,5/16-18X2-1/4X5/8,K52-1 (22 FT-LB)	2
34	310-1004	HEAD,START/STOP,G PUMP,REPLACEMNT,L50	1
35	150-1104	ELEMENT,FILTER,AIR,COMPRESSOR,JENNY,G54E	1
36	104-1008	GASKET,HEAD,K&G&W PUMP,1/32THK,L51	1
37	150-1041	RETAINER,VALVE,STEEL,PAS,0.062"THK,K43	4
38	109-1010	VALVE,BUMPER,STEEL,K44	4
39	150-1018	SPRING,CONE,SS,VALVE,DISCHARGE,K46	2
40	109-1011	VALVE,DISC,STAINLESS STEEL,K47	4
41	220-1013	PLATE,VALVE,L PUMP,CI,MACHINED,L40	1
42	150-1017	SPRING,CONE,SS,VALVE,INTAKE,K45	2
43	104-1007	GASKET,PLATE,VALVE,K&G&W PUMP,1/32TK,L41	1
44	360-1150	CYLINDER,K PUMP,CI,PAINTED,BLUE,K30	1
45	120-1017	SCREW,CAP,HEXHD,GR5,ST,BLK,5/16-18X3/4 (15FT-LB)	6

Copyright 2007 Jenny Products, Inc.

Jenny Products, Inc.
850 North Pleasant Avenue
Somerset, PA 15501-1069
Ph: 814-445-3400
Fx: 814-445-2280

Parts List for Model K & KU Pump Assembly

NOTE: The quantity number indicates the total number of pieces required for a complete unit repair.
When ordering parts give compressor model, serial number and part number. Order assemblies when possible.

REF. NO.	PART NO.	DESCRIPTION	QTY.
46	104-1006	GASKET,CYLINDER,K&G&W PUMP,1/32THK,K31	1
47	132776	SCREW,MACH,RND HD,SLTD,ST,PL,#8-32X1"	1
48	104-1264	RETAINER,BREATHER,CRANKCASE,PLASTIC,BLUE	1
49	104-1265	FILTER,AIR,BREATHER,CRANKCASE,INSERT	1
50	104-1266	SEAL,BREATHER,CRANKCASE,FILTERED,RUBBER	1
51	120-1167	RETAINER,INTERNAL,ST,0.035X 0.665,KU85	2
		Assemblies	
52	610-1410	BREATHER,CRANKCASE,W/HOUSING&FILTER&SEAL Includes 47, 48, 49, 50	1
53	610-1411	ROD,CONNECTING,W/BEARNG INSERT,L21L&L21K INCLUDES 14(2), 15, 18(2), 19(2)	2
54	610-1028	PISTON,W/RINGS&PIN,ASSY,K132 INCLUDES 20 (2), 21, 22, 23, 24 (2)	2
55	610-1020	KIT,PUMP,RING,PISTON,F&K&G&W PUMP,K133 INCLUDES 23 (2), 24 (4)	1
56	610-1031	VALVE,SUCTION,ASSY,K145 INCLUDES 37, 38, 40, 42	2
57	610-1045	PLATE,VALVE,W/VALVES,ASSY,L140 INCLUDES 36, 41, 43, 56(2), 60(2)	1
58	610-1042	VALVE,UNLOADER,HEAD,PUMP,ASSY,KU181 INCLUDES 26, 27, 28, 31, 51	2
59	320-1121	FILTER,W/DECALS,ASSY,G154S	1
60	610-1032	VALVE,DISCHARGE,ASSY,K146 INCLUDES 37, 38, 39, 40	2
61	610-1026	KIT,GASKET,K PUMP,ASSY,K100A INCLUDES 12,13,36,43,46	1
NOT SHOWN	610-1123	KIT,BASIC,REPAIR,KU PUMP,K101 W/G54E INCLUDES 35, 52, 55, 56(2), 60(2), 61	1
NOT SHOWN	610-1304	KIT,BASIC,REPAIR,KU PUMP,W/G54E,KU101G	1

Copyright 2007 Jenny Products, Inc.

Jenny Products, Inc.
850 North Pleasant Avenue
Somerset, PA 15501-1069
Ph: 814-445-3400
Fx: 814-445-2280

Parts List for Model K & KU Pump Assembly

NOTE: The quantity number indicates the total number of pieces required for a complete unit repair.
When ordering parts give compressor model, serial number and part number. Order assemblies when possible.

REF. NO.	PART NO.	DESCRIPTION	QTY.
		INCLUDES 35, 52, 55(2), 56(2), 58(2), 60(2), 61 W/G54E	
NOT SHOWN	105-1209	OIL,PUMP,SYNTHETIC,BLUE,1 QUART,ESQ	1
NOT SHOWN	610-1226	KIT,FILTER,ASSY,G154,PKG OF 4,G154P	1
NOT SHOWN	610-1186	KIT,ELEMENT,FILTER,L54E,PKG OF 4,L54EP	1
NOT SHOWN	150-1010	ELEMENT,FILTER,AIR,COMPRESSOR,JENNY,L54E	1

Copyright 2007 Jenny Products, Inc.